Dimension

LZ-NH2300N

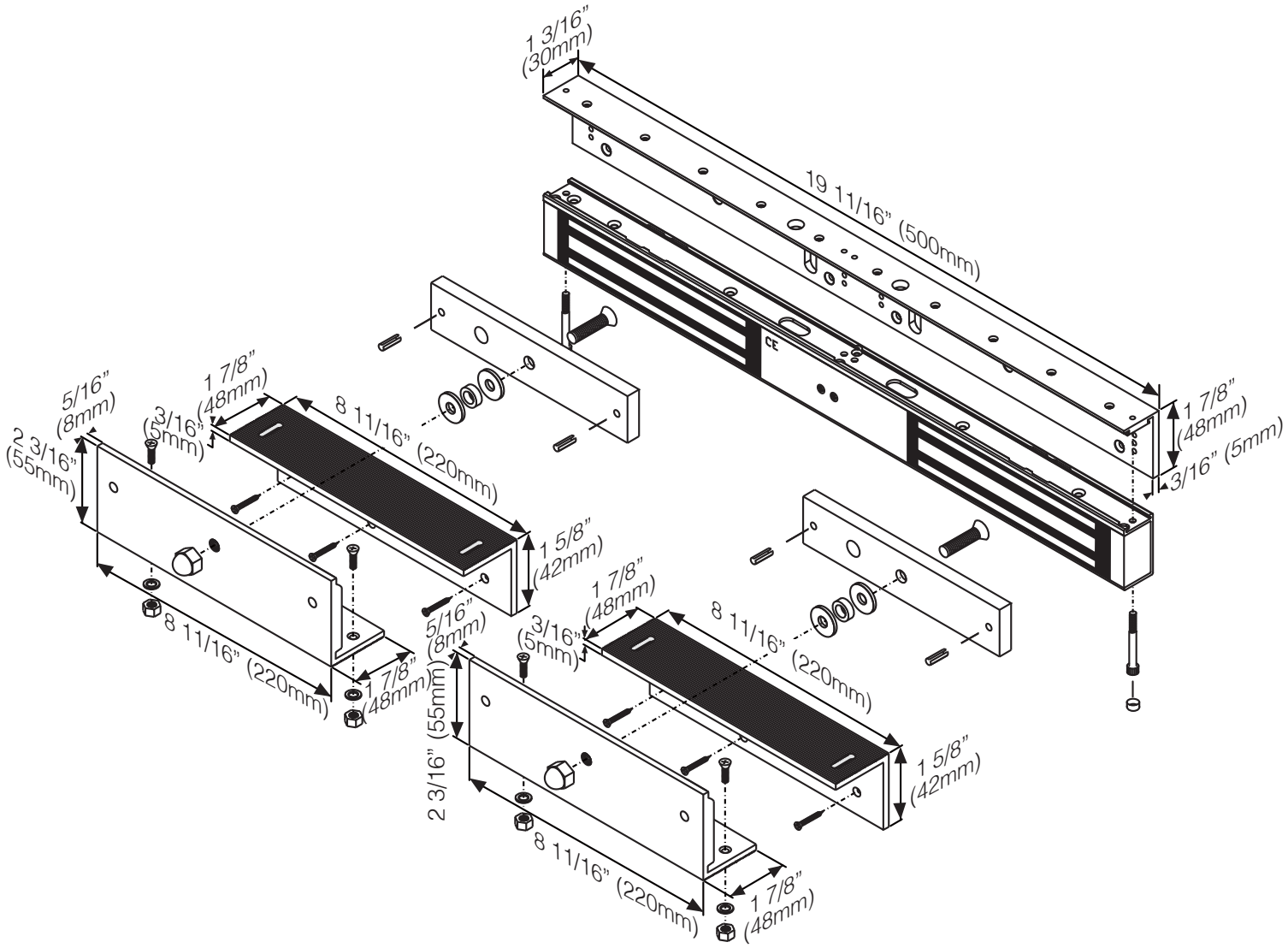

All dimensions in mm