Dimension

L-750

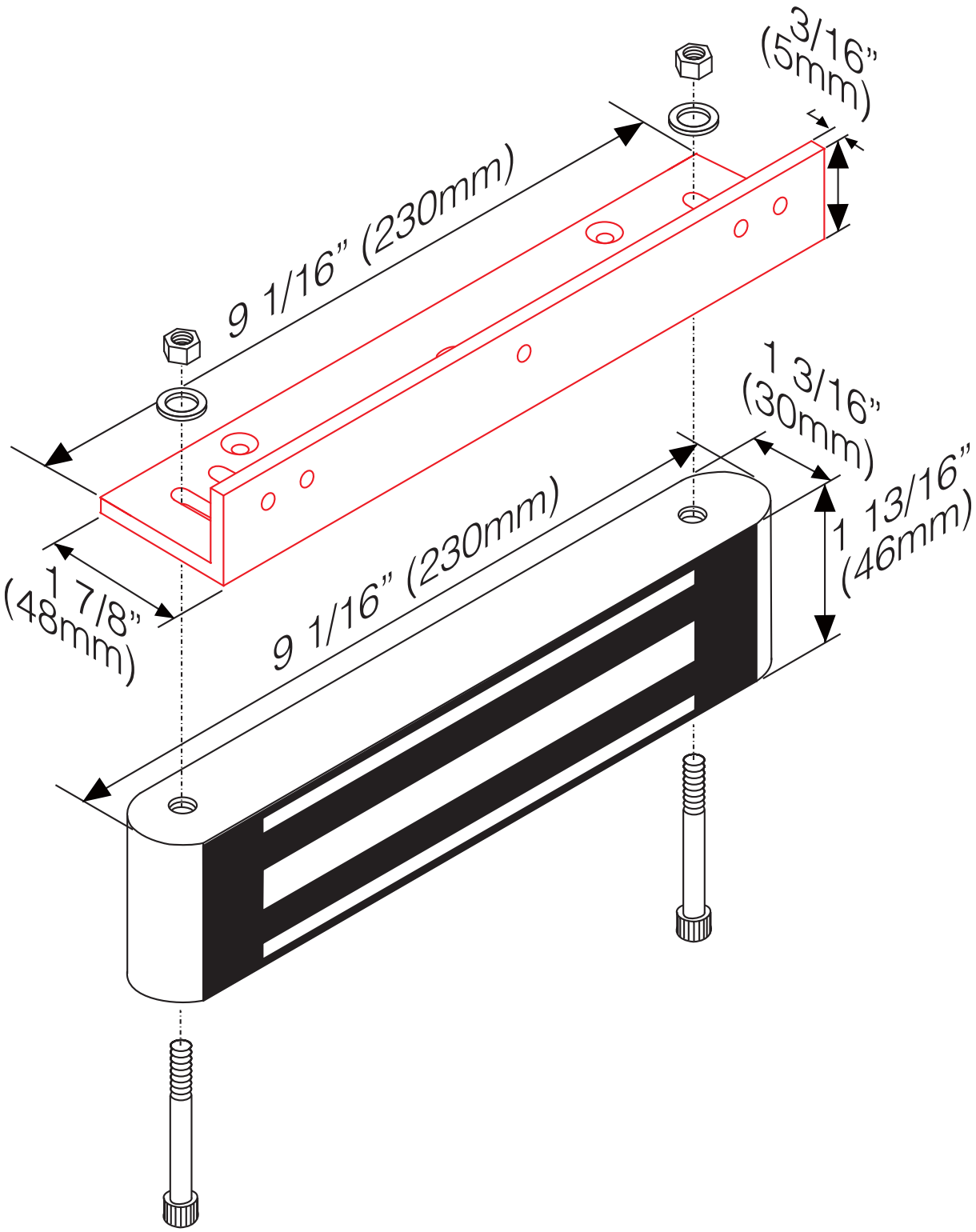

All dimensions in mm